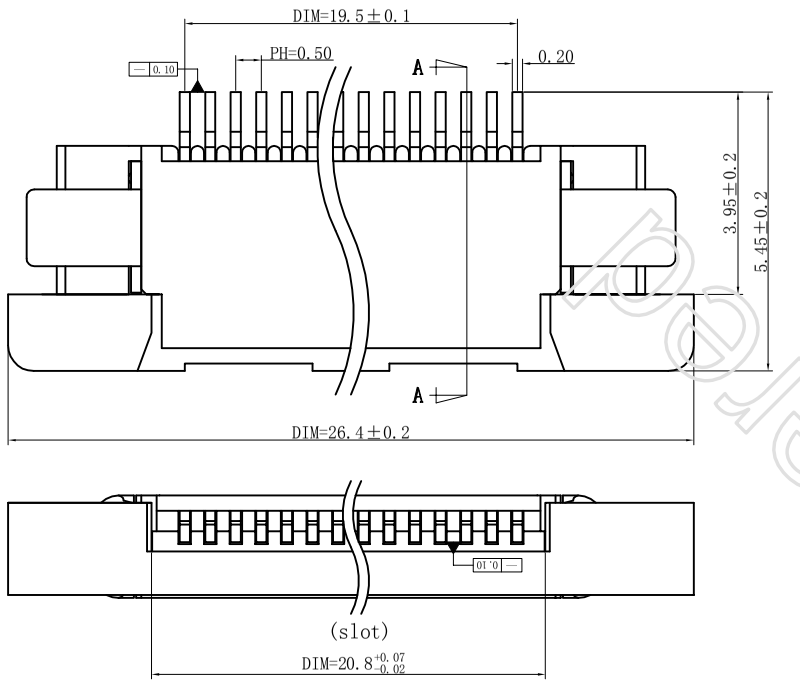

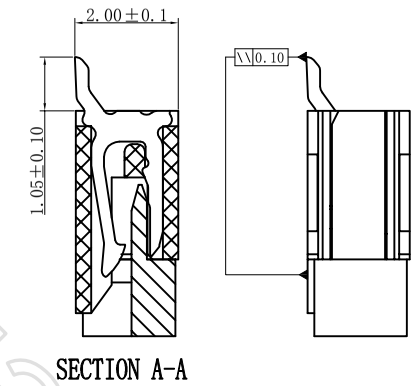

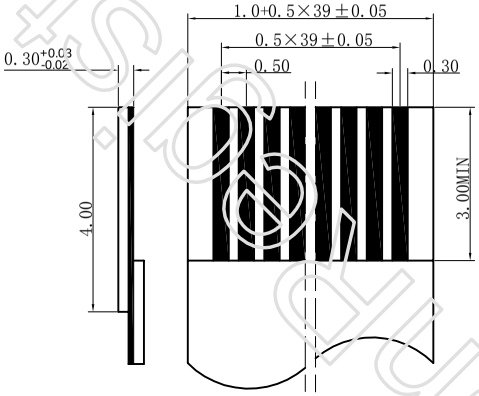

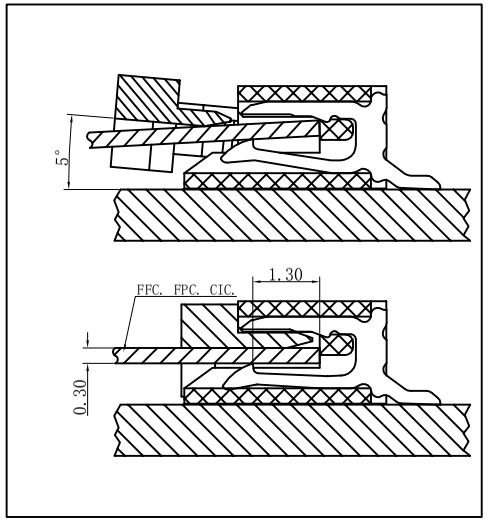

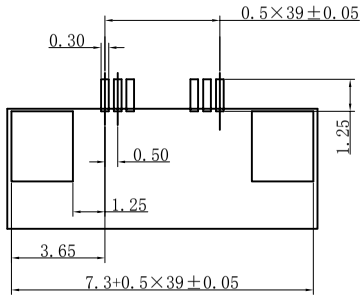

PC BOARD LAYOUT

Electrical

Voltage:50 V AC (rms)/DC
Current:0.5 A AC(rms)/DC
Contact Resistance:20 mΩ max(initial)
Dielectric Withstanding Voltage:250 V AC/rms
Insulation Resistance:50 MΩ min
Operating Temp:-20° C~+85° C

修訂 REV	修改摘要 REVISION DESCRIPTION	日期 DATE	签名 SIGNATURE
1	--	-	-

一般公差
TOLERANCES
X. ±0.15 .XX ±0.05
.X ±0.10 .XXX ±0.02
ANGLES ±1°

金科基电子有限公司

檢驗尺寸標示
SYMBOLS Ⓒ Ⓜ INDICATE CLASSIFICATION DIMENSION
Ⓒ MARK IS CRITICAL DIM.
Ⓜ MARK IS MAJOR DIM.

品名 (TITLE): FPC0.5拉拔式半包下接H=2.0
料号 (DRAWTING NO): 88008-040D3-1
制图 (DR): 尹彩艳 10/5/25
校对 (CHKD):
审核 (APPD):
表面处理 (FINISH): ——
比例 (SCALE): 1:1
單位 (UNITS): mm
张数 (SHEET): 1 OF 1
SIZE: A4
REV: 1

UnRegistered